SIEMENS

Data sheet 3SU1401-2BF50-1AA0

Siemens EcoTech

LED module with integrated LED 230 V AC, blue, screw terminal, for floor mounting



product brand name	SIRIUS ACT
product designation	LED module
product type designation	3SU1
General technical data	
product component	
● diode	Yes
● lamp transformer	No
● light source	Yes
● series resistor	No
insulation voltage rated value	320 V
degree of pollution	3
type of voltage of the operating voltage	AC
● for actuation	AC
surge voltage resistance rated value	4 kV
consumed current maximum	20 mA
protection class IP	
● of the enclosure	IP40
● of the terminal	IP20
shock resistance	
● **according to IEC 60068-2-27**	sinusoidal half-wave 15 g / 11 ms
● for railway applications according to EN 61373	Category 1, Class B
vibration resistance	
● **according to IEC 60068-2-6**	10 ... 500 Hz: 5 g
● for railway applications according to EN 61373	Category 1, Class B
operating period typical	100 000 h
reference code according to IEC 81346-2	P
Substance Prohibitance (Date)	10/01/2014
SVHC substance name	2-methyl-1-(4-methylthiophenyl)-2-morpholinopropan-1-one CAS-No. 71868-10-5
Net Weight	9 g
operating voltage 1	
● at AC	
— at 50 Hz rated value	230 V
— at 60 Hz rated value	230 V
relative positive tolerance of the operating voltage	20 %
relative negative tolerance of the operating voltage	20 %

Subject to change without notice
© Copyright Siemens

Control circuit/ Control	
inrush current maximum	3 A
Connections/ Terminals	
type of electrical connection	screw terminal
type of connectable conductor cross-sections	
● solid with core end processing	2x (0.5 ... 0.75 mm²)
● solid without core end processing	2x (1.0 ... 1.5 mm²)
● finely stranded with core end processing	2x (0.5 ... 1.5 mm²)
● finely stranded without core end processing	2x (1,0 ... 1,5 mm²)
● for AWG cables	2x (18 ... 14)
connectable conductor cross-section finely stranded with core end processing	0.5 ... 1.5 mm²
tightening torque with screw-type terminals	0.8 ... 0.9 N·m
Lamp	
type of light source	LED
color of the light source	blue
light intensity	280 ... 710 mcd
ATEX	
certificate of suitability	
● ATEX	No
● IECEx	No
Ambient conditions	
ambient temperature	
● during operation	-25 ... +70 °C
● during storage	-40 ... +80 °C
environmental category during operation according to IEC 60721	3M6, 3S2, 3B2, 3C3, 3K6 (with relative air humidity of 10 ... 95%, no condensation in operation permitted)
Installation/ mounting/ dimensions	
fastening method	
● of modules and accessories	Floor mounting
height	33.2 mm
width	9.8 mm
depth	29.4 mm
Approvals Certificates	
Environmental Product Declaration	
● global warming potential [CO2 eq] / during manufacturing	0.566 kg
● global warming potential [CO2 eq] / during operation	0.235 kg
● global warming potential [CO2 eq] / after end of life	-0.0145 kg
● global warming potential [CO2 eq] / total	0.787 kg

Environment

Environmental Con-firmations

General Product Approval

General Product Approval | **EMV**

Test Certificates

Type Test Certific-ates/Test Report

Special Test Certific-ate

Maritime application

Maritime application

other

Confirmation

Subject to change without notice
© Copyright Siemens

Further information

Information on the packaging
https://support.industry.siemens.com/cs/ww/en/view/109813875
Information for data generation and storage
https://support.industry.siemens.com/cs/ww/en/view/109995012
Information- and Downloadcenter (Catalogs, Brochures,…)
https://www.siemens.com/ic10
Industry Mall (Online ordering system)
https://mall.industry.siemens.com/mall/en/en/Catalog/product?mlfb=3SU1401-2BF50-1AA0
Cax online generator
https://support.automation.siemens.com/WW/CAXorder/default.aspx?lang=en&mlfb=3SU1401-2BF50-1AA0
Service&Support (Manuals, Certificates, Characteristics, FAQs,...)
https://support.industry.siemens.com/cs/ww/en/ps/3SU1401-2BF50-1AA0
Image database (product images, 2D dimension drawings, 3D models, device circuit diagrams, EPLAN macros, ...)
https://www.automation.siemens.com/bilddb/cax_de.aspx?mlfb=3SU1401-2BF50-1AA0&lang=en

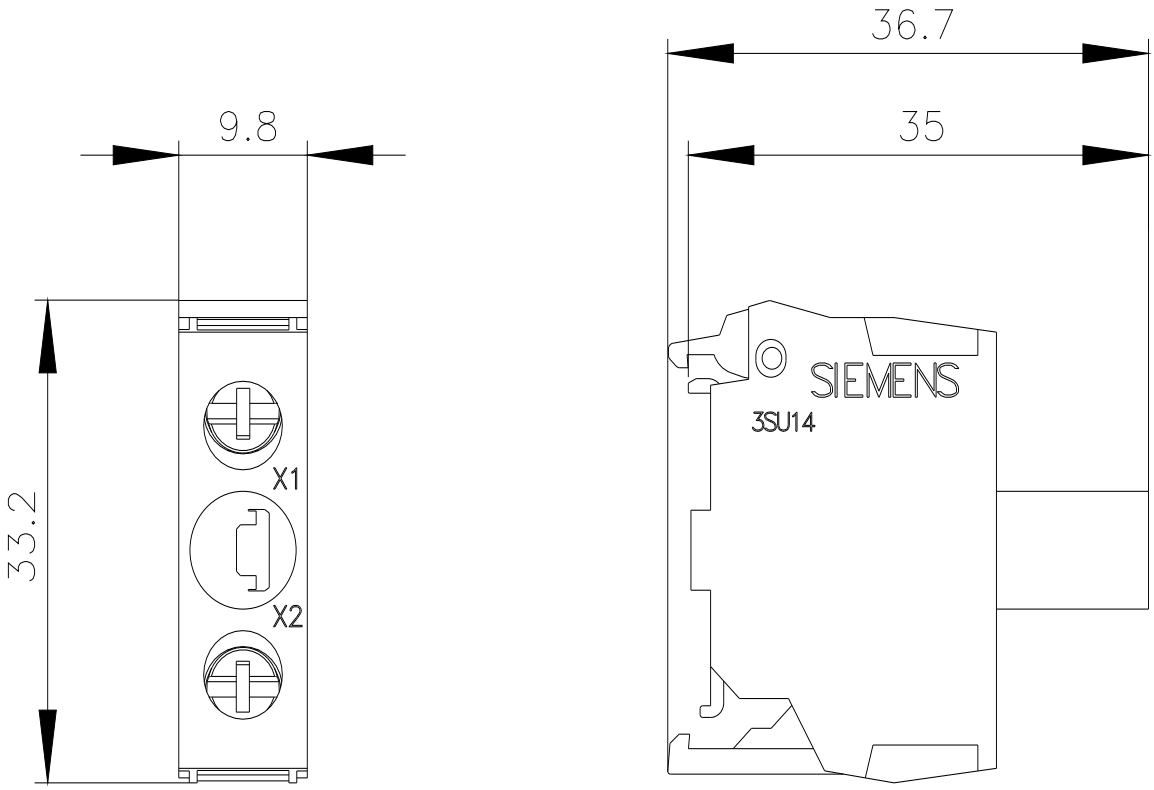

Subject to change without notice
© Copyright Siemens

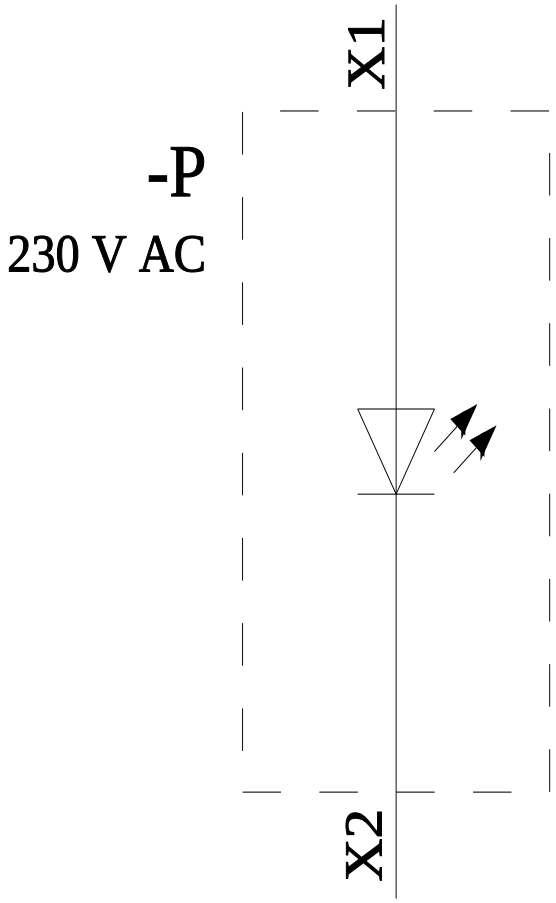

last modified: 4/4/2026

Subject to change without notice
© Copyright Siemens