SIEMENS

Data sheet 3RT2017-1UB41



power contactor, AC-3e/AC-3, 12 A, 5.5 kW / 400 V, 3-pole, 24 V DC, with integrated varistor, auxiliary contacts: 1 NO, screw terminal, size: S00

product brand name	SIRIUS
product designation	Power contactor
product type designation	3RT2
General technical data	
size of contactor	S00
product extension	
● function module for communication	No
● auxiliary switch	Yes
power loss [W] for rated value of the current	
● at AC in hot operating state	1.5 W
● at AC in hot operating state per pole	0.5 W
● without load current share typical	4 W
type of calculation of power loss current-dependent	quadratic
insulation voltage	
● of main circuit with degree of pollution 3 rated value	690 V
● of auxiliary circuit with degree of pollution 3 rated value	690 V
surge voltage resistance	
● of main circuit rated value	6 kV
● of auxiliary circuit rated value	6 kV
maximum permissible voltage for protective separation between coil and main contacts according to EN 60947-1	400 V
shock resistance at rectangular impulse	
● at DC	7.3 g / 5 ms, 4.7 g / 10 ms
shock resistance with sine pulse	
● at DC	11,4 g / 5 ms, 7,3g / 10 ms
mechanical service life (operating cycles)	
● of contactor typical	30 000 000
reference code according to IEC 81346-2	Q
Substance Prohibitance (Date)	10/01/2009
Net Weight	0.28 kg
Ambient conditions	
installation altitude at height above sea level maximum	2 000 m
ambient temperature	
● during operation	-25 ... +60 °C
● during storage	-55 ... +80 °C
relative humidity minimum	10 %
relative humidity at 55 °C according to IEC 60068-2-30 maximum	95 %
Main circuit	

Subject to change without notice
© Copyright Siemens

number of poles for main current circuit	3
number of NO contacts for main contacts	3
number of NC contacts for main contacts	0
operating voltage	
● at AC-3 rated value maximum	690 V
● at AC-3e rated value maximum	690 V
operational current	
● at AC-1 at 400 V at ambient temperature 40 °C rated value	22 A
● at AC-1	
— up to 690 V at ambient temperature 40 °C rated value	22 A
— up to 690 V at ambient temperature 60 °C rated value	20 A
● at AC-3	
— at 400 V rated value	12 A
— at 500 V rated value	9.2 A
— at 690 V rated value	6.7 A
● at AC-3e	
— at 400 V rated value	12 A
— at 500 V rated value	9.2 A
— at 690 V rated value	6.7 A
● at AC-4 at 400 V rated value	8.5 A
● at AC-5a up to 690 V rated value	19.4 A
● at AC-5b up to 400 V rated value	9.9 A
● at AC-6a	
— up to 230 V for current peak value n=20 rated value	7.2 A
— up to 400 V for current peak value n=20 rated value	7.2 A
— up to 500 V for current peak value n=20 rated value	7.2 A
— up to 690 V for current peak value n=20 rated value	6.7 A
● at AC-6a	
— up to 230 V for current peak value n=30 rated value	4.8 A
— up to 400 V for current peak value n=30 rated value	4.8 A
— up to 500 V for current peak value n=30 rated value	4.8 A
— up to 690 V for current peak value n=30 rated value	4.8 A
minimum cross-section in main circuit at maximum AC-1 rated value	4 mm²
operational current for approx. 200000 operating cycles at AC-4	
● at 400 V rated value	4.1 A
● at 690 V rated value	3.3 A
operational current	
● at 1 current path at DC-1	
— at 24 V rated value	20 A
— at 60 V rated value	20 A
— at 110 V rated value	2.1 A
— at 220 V rated value	0.8 A
— at 440 V rated value	0.6 A
— at 600 V rated value	0.6 A
● with 2 current paths in series at DC-1	
— at 24 V rated value	20 A
— at 60 V rated value	20 A
— at 110 V rated value	12 A
— at 220 V rated value	1.6 A
— at 440 V rated value	0.8 A
— at 600 V rated value	0.7 A
● with 3 current paths in series at DC-1	
— at 24 V rated value	20 A
— at 60 V rated value	20 A
— at 110 V rated value	20 A

Subject to change without notice
© Copyright Siemens

— at 220 V rated value	20 A
— at 440 V rated value	1.3 A
— at 600 V rated value	1 A
● at 1 current path at DC-3 at DC-5	
— at 24 V rated value	20 A
— at 60 V rated value	0.5 A
— at 110 V rated value	0.15 A
● with 2 current paths in series at DC-3 at DC-5	
— at 24 V rated value	20 A
— at 60 V rated value	5 A
— at 110 V rated value	0.35 A
● with 3 current paths in series at DC-3 at DC-5	
— at 24 V rated value	20 A
— at 60 V rated value	20 A
— at 110 V rated value	20 A
— at 220 V rated value	1.5 A
— at 440 V rated value	0.2 A
— at 600 V rated value	0.2 A
operating power	
● at AC-2 at 400 V rated value	5.5 kW
● at AC-3	
— at 230 V rated value	3 kW
— at 400 V rated value	5.5 kW
— at 500 V rated value	5.5 kW
— at 690 V rated value	5.5 kW
● at AC-3e	
— at 230 V rated value	3 kW
— at 400 V rated value	5.5 kW
— at 500 V rated value	5.5 kW
— at 690 V rated value	5.5 kW
operating power for approx. 200000 operating cycles at AC-4	
● at 400 V rated value	2 kW
● at 690 V rated value	2.5 kW
operating apparent power at AC-6a	
● up to 230 V for current peak value n=20 rated value	2.8 kVA
● up to 400 V for current peak value n=20 rated value	4.9 kVA
● up to 500 V for current peak value n=20 rated value	6.2 kVA
● up to 690 V for current peak value n=20 rated value	8 kVA
operating apparent power at AC-6a	
● up to 230 V for current peak value n=30 rated value	1.9 kVA
● up to 400 V for current peak value n=30 rated value	3.3 kVA
● up to 500 V for current peak value n=30 rated value	4.1 kVA
● up to 690 V for current peak value n=30 rated value	5.7 kVA
short-time withstand current in cold operating state up to 40 °C	
● limited to 1 s switching at zero current maximum	200 A; Use minimum cross-section acc. to AC-1 rated value
● limited to 5 s switching at zero current maximum	123 A; Use minimum cross-section acc. to AC-1 rated value
● limited to 10 s switching at zero current maximum	96 A; Use minimum cross-section acc. to AC-1 rated value
● limited to 30 s switching at zero current maximum	74 A; Use minimum cross-section acc. to AC-1 rated value
● limited to 60 s switching at zero current maximum	61 A; Use minimum cross-section acc. to AC-1 rated value
no-load switching frequency	
● at DC	10 000 1/h
operating frequency	
● at AC-1 maximum	1 000 1/h
● at AC-2 maximum	750 1/h
● at AC-3 maximum	750 1/h
● at AC-3e	
— maximum	750 1/h

© Copyright Siemens

● at AC-4 maximum	250 1/h
Control circuit/ Control	
type of voltage of the control supply voltage	DC
control supply voltage at DC rated value	24 V
operating range factor control supply voltage rated value of magnet coil at DC	
● initial value	0.8
● full-scale value	1.1
design of the surge suppressor	with varistor
closing power of magnet coil at DC	4 W
holding power of magnet coil at DC	4 W
closing delay	
● at DC	30 ... 100 ms
opening delay	
● at DC	7 ... 13 ms
arcing time	10 ... 15 ms
control version of the switch operating mechanism	Standard A1 - A2
Auxiliary circuit	
number of NC contacts for auxiliary contacts instantaneous contact	0
number of NO contacts for auxiliary contacts instantaneous contact	1
operational current at AC-12 maximum	10 A
operational current at AC-15	
● at 230 V rated value	10 A
● at 400 V rated value	3 A
● at 500 V rated value	2 A
● at 690 V rated value	1 A
operational current at DC-12	
● at 24 V rated value	10 A
● at 48 V rated value	6 A
● at 60 V rated value	6 A
● at 110 V rated value	3 A
● at 125 V rated value	2 A
● at 220 V rated value	1 A
● at 600 V rated value	0.15 A
operational current at DC-13	
● at 24 V rated value	10 A
● at 48 V rated value	2 A
● at 60 V rated value	2 A
● at 110 V rated value	1 A
● at 125 V rated value	0.9 A
● at 220 V rated value	0.3 A
● at 600 V rated value	0.1 A
contact reliability of auxiliary contacts	1 faulty switching per 100 million (17 V, 1 mA)
UL/CSA ratings	
full-load current (FLA) for 3-phase AC motor	
● at 480 V rated value	11 A
● at 600 V rated value	11 A
yielded mechanical performance [hp]	
● for single-phase AC motor	
— at 110/120 V rated value	0.5 hp
— at 230 V rated value	2 hp
● for 3-phase AC motor	
— at 200/208 V rated value	3 hp
— at 220/230 V rated value	3 hp
— at 460/480 V rated value	8 hp
— at 575/600 V rated value	10 hp
contact rating of auxiliary contacts according to UL	A600 / Q600

Subject to change without notice
© Copyright Siemens

Short-circuit protection	
design of the miniature circuit breaker for short-circuit protection of the auxiliary circuit up to 230 V	C characteristic: 10 A; 0.4 kA
design of the fuse link	
● for short-circuit protection of the main circuit	
— with type of coordination 1 required	gG: 50 A (690 V,100 kA), aM: 20 A (690 V,100 kA), BS88: 35 A (415 V,80 kA)
— with type of coordination 2 required	gG: 20 A (690 V, 100 kA), aM: 16 A (690 V, 100 kA), BS88: 20 A (415 V, 80 kA)
● for short-circuit protection of the auxiliary switch required	gG: 10 A (500 V, 1 kA)
Installation/ mounting/ dimensions	
mounting position	+/-180° rotation possible on vertical mounting surface; can be tilted forward and backward by +/- 22.5° on vertical mounting surface
fastening method side-by-side mounting	Yes
fastening method	screw and snap-on mounting onto 35 mm DIN rail according to DIN EN 60715
height	58 mm
width	45 mm
depth	73 mm
required spacing	
● with side-by-side mounting	
— forwards	10 mm
— upwards	10 mm
— downwards	10 mm
— at the side	0 mm
● for grounded parts	
— forwards	10 mm
— upwards	10 mm
— at the side	6 mm
— downwards	10 mm
● for live parts	
— forwards	10 mm
— upwards	10 mm
— downwards	10 mm
— at the side	6 mm
Connections/ Terminals	
type of electrical connection	
● for main current circuit	screw-type terminals
● for auxiliary and control circuit	screw-type terminals
● at contactor for auxiliary contacts	Screw-type terminals
● of magnet coil	Screw-type terminals
type of connectable conductor cross-sections	
● for main contacts	
— solid	2x (0.5 ... 1.5 mm²), 2x (0.75 ... 2.5 mm²), 2x 4 mm²
— solid or stranded	2x (0,5 ... 1,5 mm²), 2x (0,75 ... 2,5 mm²), 2x 4 mm²
— finely stranded with core end processing	2x (0.5 ... 1.5 mm²), 2x (0.75 ... 2.5 mm²)
● for AWG cables for main contacts	2x (20 ... 16), 2x (18 ... 14), 2x 12
connectable conductor cross-section for main contacts	
● solid	0.5 ... 4 mm²
● stranded	0.5 ... 4 mm²
● finely stranded with core end processing	0.5 ... 2.5 mm²
connectable conductor cross-section for auxiliary contacts	
● solid or stranded	0.5 ... 4 mm²
● finely stranded with core end processing	0.5 ... 2.5 mm²
type of connectable conductor cross-sections	
● for auxiliary contacts	
— solid or stranded	2x (0.5 ... 1.5 mm²), 2x (0.75 ... 2.5 mm²), 2x 4 mm²
— finely stranded with core end processing	2x (0.5 ... 1.5 mm²), 2x (0.75 ... 2.5 mm²)
● for AWG cables for auxiliary contacts	2x (20 ... 16), 2x (18 ... 14), 2x 12
AWG number as coded connectable conductor cross section for main contacts	20 ... 12
AWG number as coded connectable conductor cross section for auxiliary contacts	20 ... 12

© Copyright Siemens

Safety related data	
product function	
● mirror contact according to IEC 60947-4-1	No
● positively driven operation according to IEC 60947-5-1	No
● suitable for safety function	Yes
suitability for use safety-related switching OFF	Yes
service life maximum	20 a
test wear-related service life necessary	Yes
proportion of dangerous failures	
● with low demand rate according to SN 31920	40 %
● with high demand rate according to SN 31920	73 %
B10 value with high demand rate according to SN 31920	1 000 000
failure rate [FIT] with low demand rate according to SN 31920	100 FIT
ISO 13849	
device type according to ISO 13849-1	3
overdimensioning according to ISO 13849-2 necessary	Yes
IEC 61508	
safety device type according to IEC 61508-2	Type A
Electrical Safety	
protection class IP on the front according to IEC 60529	IP20
touch protection on the front according to IEC 60529	finger-safe, for vertical contact from the front
Approvals Certificates	
Environmental Product Declaration	
● global warming potential [CO2 eq] / during manufacturing	1.42 kg
● global warming potential [CO2 eq] / during operation	152 kg
● global warming potential [CO2 eq] / after end of life	-0.305 kg
● global warming potential [CO2 eq] / total	153 kg

Environment

Environmental Confirmations

General Product Approval

General Product Approval

Maritime application

Maritime application

other

Confirmation

Further information

Information on the packaging
https://support.industry.siemens.com/cs/ww/en/view/109813875
Information for data generation and storage
https://support.industry.siemens.com/cs/ww/en/view/109995012
Information- and Downloadcenter (Catalogs, Brochures,…)
https://www.siemens.com/ic10
Industry Mall (Online ordering system)
https://mall.industry.siemens.com/mall/en/en/Catalog/product?mlfb=3RT2017-1UB41
Service&Support (Manuals, Certificates, Characteristics, FAQs,...)
https://support.industry.siemens.com/cs/ww/en/ps/3RT2017-1UB41
Image database (product images, 2D dimension drawings, 3D models, device circuit diagrams, EPLAN macros, ...)
https://www.automation.siemens.com/bilddb/cax_de.aspx?mlfb=3RT2017-1UB41&lang=en

© Copyright Siemens

Cax online generator
https://support.automation.siemens.com/WW/CAXorder/default.aspx?lang=en&mlfb=3RT2017-1UB41
Characteristic curves
https://curves.simaris.siemens.com/curves/<mmp_prod_noCOMP="HAUPT"></mmp_prod__no>

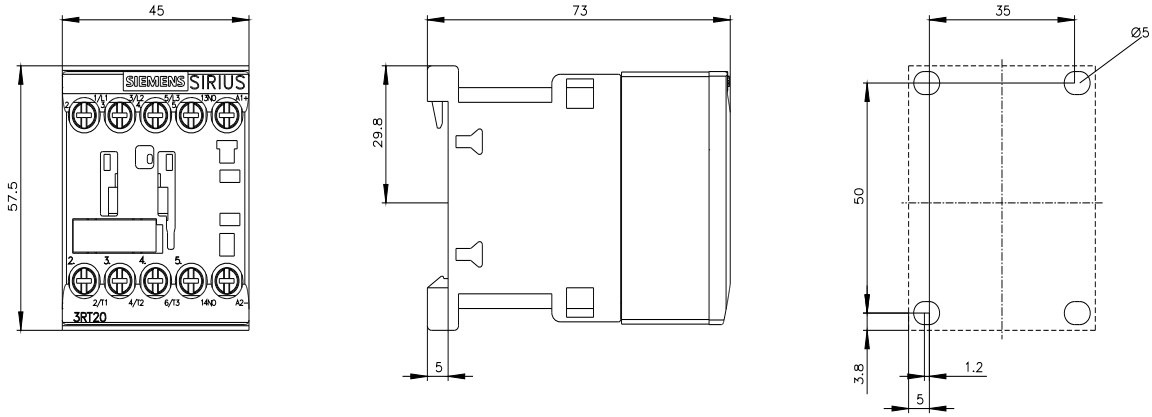

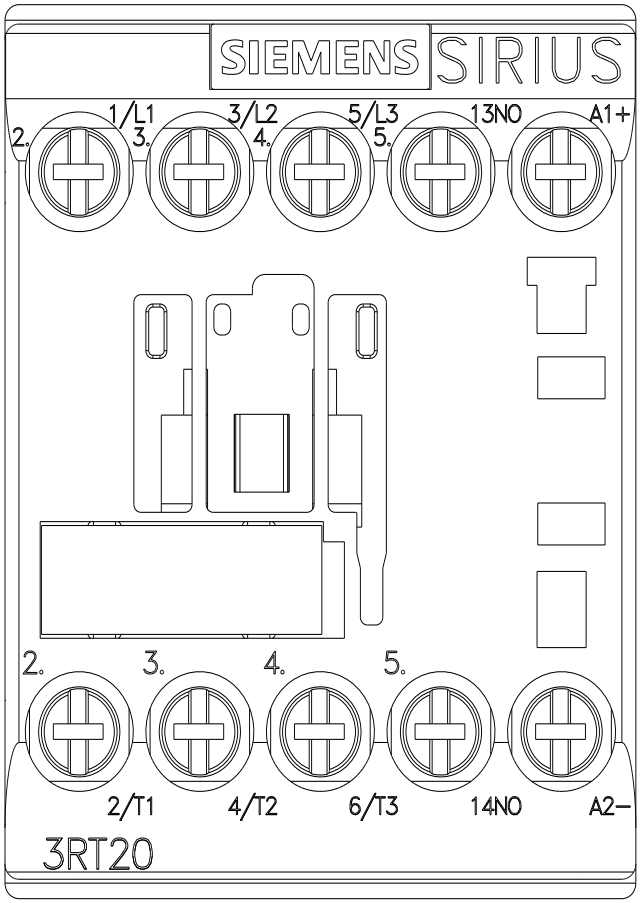

Subject to change without notice
© Copyright Siemens

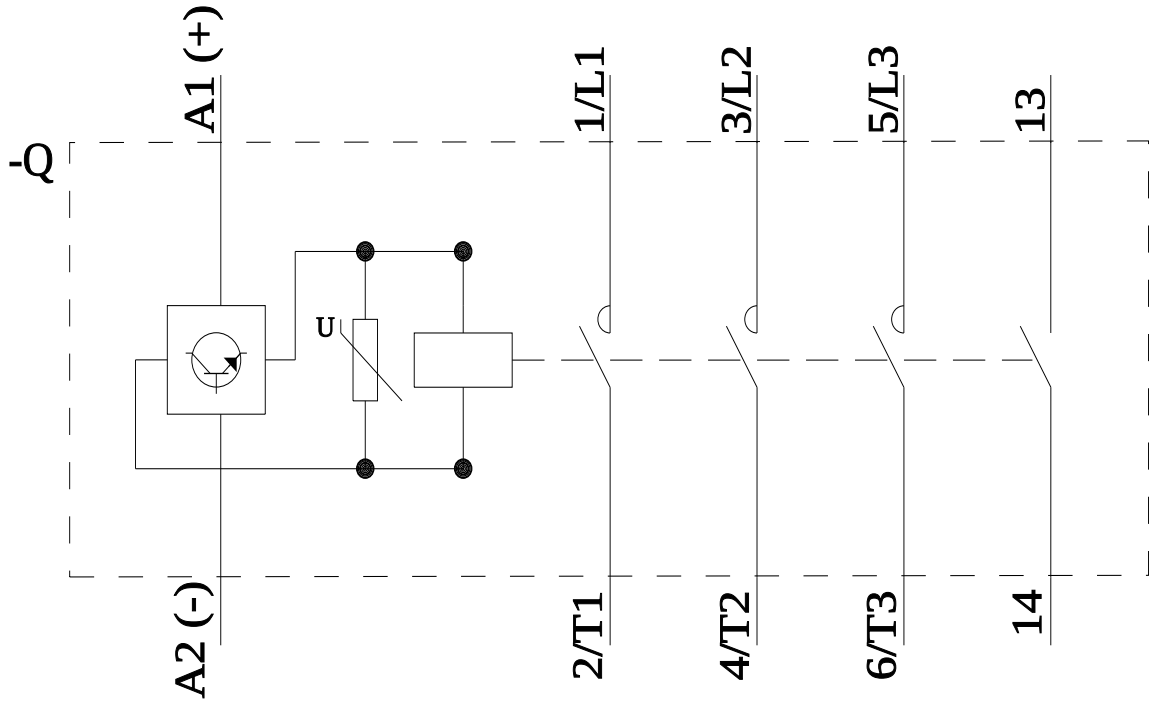

last modified: 4/4/2026

Subject to change without notice
© Copyright Siemens