SIEMENS

## Data sheet 3SU1900-0HH10-0AA0



metric screw connection M25 with hexagon nut for enclosure

| | |
|---|---|
| **product brand name** | SIRIUS ACT |
| **product designation** | Metric cable gland |
| **design of the product** | M25 for round cable and enclosures with 4 and 6 command points |
| **product type designation** | 3SU1 |
| **Enclosure** | |
| **cable sheath diameter connectable** | 9 ... 14 mm |
| **General technical data** | |
| **protection class IP** | IP66, IP67, IP69(IP69K) |
| **Substance Prohibitance (Date)** | 10/01/2014 |
| **Net Weight** | 27 g |
| **Ambient conditions** | |
| **ambient temperature** | |
| ● during operation | -25 ... +70 °C |
| ● during storage and transport | -40 ... +80 °C |
| **Installation/ mounting/ dimensions** | |
| **height** | 29.7 mm |
| **width** | 29.7 mm |
| **mounting height** | 31 mm |
| **installation depth** | 13 mm |
| **Accessories** | |
| **material of accessory** | Plastic |
| **color of accessory** | black |
| **Approvals Certificates** | |
| Environmental Product Declaration | |
| ● global warming potential [CO2 eq] / during manufacturing | 0.566 kg |
| ● global warming potential [CO2 eq] / during operation | 0.235 kg |
| ● global warming potential [CO2 eq] / after end of life | -0.0145 kg |
| ● global warming potential [CO2 eq] / total | 0.787 kg |

| Environment | General Product Approval | Maritime application |
|---|---|---|

Environmental Confirmations

| Maritime application | other |
|---|---|


Subject to change without notice
© Copyright Siemens

LRS PRS RINA

Confirmation

## Further information

**Information on the packaging**
https://support.industry.siemens.com/cs/ww/en/view/109813875
**Information for data generation and storage**
https://support.industry.siemens.com/cs/ww/en/view/109995012
**Information- and Downloadcenter (Catalogs, Brochures,…)**
https://www.siemens.com/ic10
**Industry Mall (Online ordering system)**
https://mall.industry.siemens.com/mall/en/en/Catalog/product?mlfb=3SU1900-0HH10-0AA0
**Cax online generator**
https://support.automation.siemens.com/WW/CAXorder/default.aspx?lang=en&mlfb=3SU1900-0HH10-0AA0
**Service&Support (Manuals, Certificates, Characteristics, FAQs,...)**
https://support.industry.siemens.com/cs/ww/en/ps/3SU1900-0HH10-0AA0
**Image database (product images, 2D dimension drawings, 3D models, device circuit diagrams, EPLAN macros, ...)**
https://www.automation.siemens.com/bilddb/cax_de.aspx?mlfb=3SU1900-0HH10-0AA0&lang=en

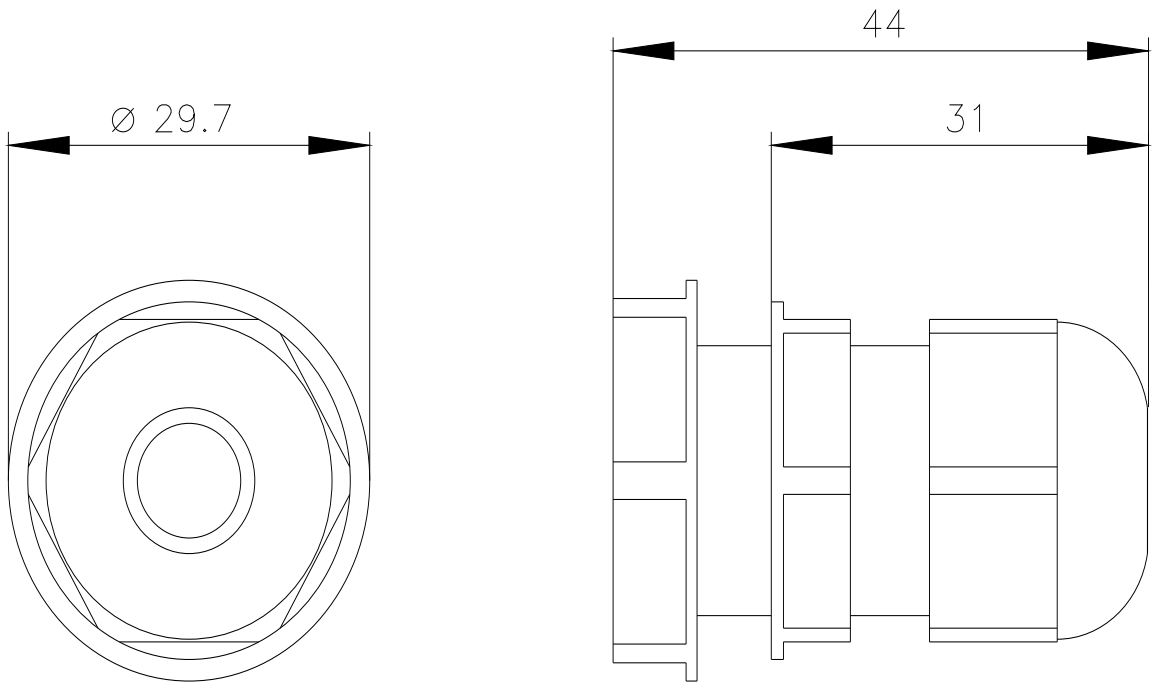


**last modified:** 4/2/2025


Subject to change without notice
© Copyright Siemens