SIEMENS

Data sheet 3SU1050-0AB10-0AA0



Pushbutton, 22 mm, round, metal, shiny, black, pushbutton, flat momentary contact type

product brand name	SIRIUS ACT
product designation	Pushbuttons
design of the product	Actuating/signaling element
product type designation	3SU1
product line	Metal, shiny, 22 mm
Enclosure	
number of command points	1
Actuator	
design of the actuating element	Flat button
principle of operation of the actuating element	momentary contact type
product extension optional	
• light source	No
• contact module	Yes
color of the actuating element	black
material of the actuating element	plastic
shape of the actuating element	round
outer diameter of the actuating element	29.5 mm
Front ring	
product component front ring	Yes
design of the front ring	Standard
material of the front ring	Metal, high gloss
color of the front ring	silver
General technical data	
protection class IP	IP66, IP67, IP69(IP69K)
degree of protection NEMA rating	1, 2, 3, 3R, 4, 4X, 12, 13
shock resistance	
• **according to IEC 60068-2-27**	sinusoidal half-wave 15 g / 11 ms
vibration resistance	
• **according to IEC 60068-2-6**	10 ... 500 Hz: 5 g
operating frequency maximum	3 600 1/h
mechanical service life (operating cycles) typical	10 000 000
reference code according to IEC 81346-2	S
Substance Prohibitance (Date)	10/01/2014
Net Weight	36 g
Safety related data	
proportion of dangerous failures	

Subject to change without notice
© Copyright Siemens

● with low demand rate according to SN 31920	20 %
● with high demand rate per NC contact according to SN 31920	20 %
● with high demand rate per NO contact according to SN 31920	50 %
B10 value with high demand rate according to SN 31920	10 000 000
failure rate [FIT] with low demand rate per NC contact according to SN 31920	100 FIT
IEC 61508	
T1 value for proof test interval or service life according to IEC 61508	20 a
Ambient conditions	
ambient temperature	
● during operation	-25 ... +70 °C
● during storage	-40 ... +80 °C
environmental category during operation according to IEC 60721	3M6, 3S2, 3B2, 3C3, 3K6 (with relative air humidity of 10 ... 95%)
Installation/ mounting/ dimensions	
height	29.5 mm
width	29.5 mm
shape of the installation opening	round
mounting diameter	22.3 mm
positive tolerance of installation diameter	0.4 mm
mounting height	11 mm
installation width	29.5 mm
installation depth	24.3 mm
Approvals Certificates	
Environmental Product Declaration	
● global warming potential [CO2 eq] / during manufacturing	0.625 kg
● global warming potential [CO2 eq] / during operation	0.235 kg
● global warming potential [CO2 eq] / after end of life	-0.267 kg
● global warming potential [CO2 eq] / total	0.593 kg

Environment

Environmental Confirmations

General Product Approval

General Product Approval | **Test Certificates** | **Maritime application**

Special Test Certificate | Type Test Certificates/Test Report

Maritime application | **other**

Confirmation

Further information

Information on the packaging
https://support.industry.siemens.com/cs/ww/en/view/109813875
Information for data generation and storage
https://support.industry.siemens.com/cs/ww/en/view/109995012
Information- and Downloadcenter (Catalogs, Brochures,…)
https://www.siemens.com/ic10
Industry Mall (Online ordering system)
https://mall.industry.siemens.com/mall/en/en/Catalog/product?mlfb=3SU1050-0AB10-0AA0

© Copyright Siemens

Cax online generator
https://support.automation.siemens.com/WW/CAXorder/default.aspx?lang=en&mlfb=3SU1050-0AB10-0AA0
Service&Support (Manuals, Certificates, Characteristics, FAQs,...)
https://support.industry.siemens.com/cs/ww/en/ps/3SU1050-0AB10-0AA0
Image database (product images, 2D dimension drawings, 3D models, device circuit diagrams, EPLAN macros, ...)
https://www.automation.siemens.com/bilddb/cax_de.aspx?mlfb=3SU1050-0AB10-0AA0&lang=en

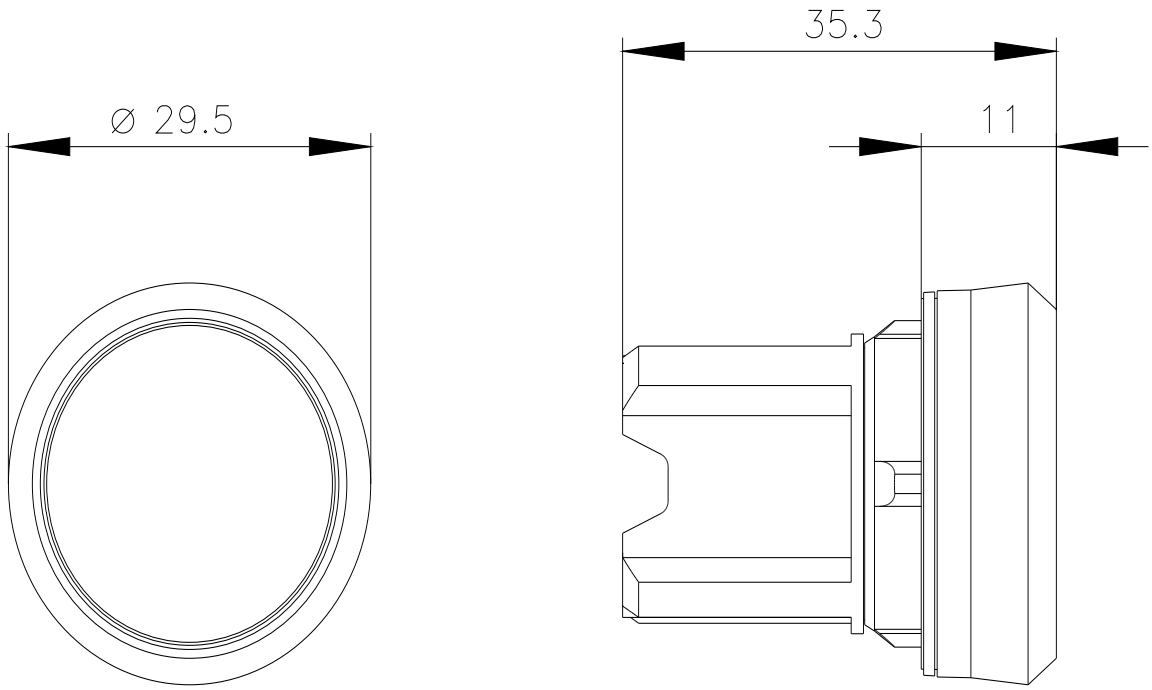

last modified: 4/4/2026

Subject to change without notice
© Copyright Siemens