SIEMENS

Data sheet 3SU1950-0FA80-0AA0



Sealing plug for unused control points, 22 mm, Metal, shiny, silver

product brand name	SIRIUS ACT
product designation	Sealing plug
product type designation	3SU1
Actuator	
shape of the actuating element	round
outer diameter of the actuating element	29.5 mm
General technical data	
protection class IP	IP66, IP67, IP69(IP69K)
degree of protection NEMA rating	1, 2, 3, 3R, 4, 4X, 12
reference code according to IEC 81346-2	S
Substance Prohibitance (Date)	10/01/2014
Net Weight	38 g
Ambient conditions	
ambient temperature	
● during operation	70 ... -25 °C
● during storage and transport	-40 ... +80 °C
environmental category during operation according to IEC 60721	3M6, 3S2, 3B2, 3C3, 3K6 (with relative air humidity of 10 ... 95%)
Installation/ mounting/ dimensions	
shape of the installation opening	round
mounting diameter	22.3 mm
positive tolerance of installation diameter	0.4 mm
mounting height	6.5 mm
installation width	29.5 mm
installation depth	24.2 mm
Accessories	
material of accessory	Metal
color of accessory	Silver
Approvals Certificates	
Environmental Product Declaration	
● global warming potential [CO2 eq] / during manufacturing	0.625 kg
● global warming potential [CO2 eq] / during operation	0.235 kg
● global warming potential [CO2 eq] / after end of life	-0.267 kg
● global warming potential [CO2 eq] / total	0.593 kg

Environment	**General Product Approval**

Subject to change without notice
© Copyright Siemens

Environmental Confirmations

General Product Approval	Test Certificates		Maritime application		
	Type Test Certificates/Test Report	Special Test Certificate			

Maritime application	other	
		Confirmation

Further information

Information on the packaging
https://support.industry.siemens.com/cs/ww/en/view/109813875
Information for data generation and storage
https://support.industry.siemens.com/cs/ww/en/view/109995012
Information- and Downloadcenter (Catalogs, Brochures,…)
https://www.siemens.com/ic10
Industry Mall (Online ordering system)
https://mall.industry.siemens.com/mall/en/en/Catalog/product?mlfb=3SU1950-0FA80-0AA0
Cax online generator
https://support.automation.siemens.com/WW/CAXorder/default.aspx?lang=en&mlfb=3SU1950-0FA80-0AA0
Service&Support (Manuals, Certificates, Characteristics, FAQs,...)
https://support.industry.siemens.com/cs/ww/en/ps/3SU1950-0FA80-0AA0
Image database (product images, 2D dimension drawings, 3D models, device circuit diagrams, EPLAN macros, ...)
https://www.automation.siemens.com/bilddb/cax_de.aspx?mlfb=3SU1950-0FA80-0AA0&lang=en

© Copyright Siemens

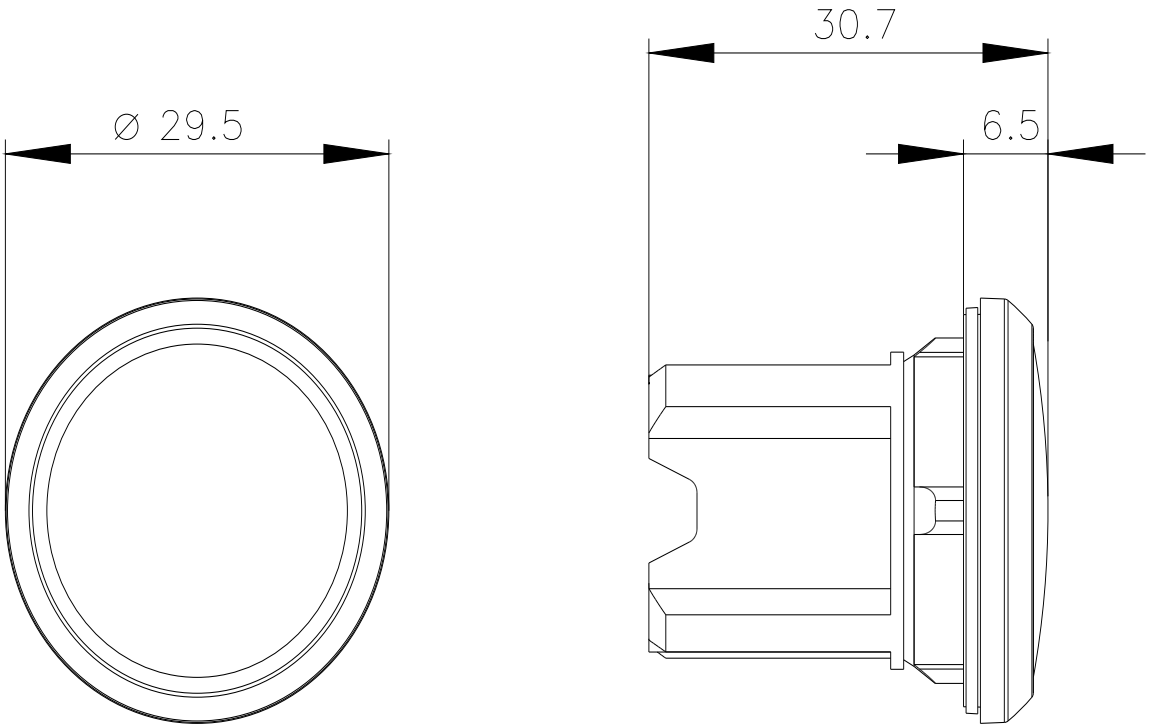

last modified: 4/2/2025

Subject to change without notice
© Copyright Siemens