SIEMENS

Data sheet 3SU1051-6AA40-0AA0



Indicator lights, 22 mm, round, metal, shiny, green, lens, smooth

product brand name	SIRIUS ACT
product designation	Indicator lights
design of the product	Actuating/signaling element
product type designation	3SU1
product line	Metal, shiny, 22 mm
Actuator	
product extension optional	
● light source	Yes
● contact module	No
color	
● of the actuating element	green
● of the cover cap	green
material of the actuating element	plastic
shape of the actuating element	round
outer diameter of the actuating element	29.45 mm
Front ring	
product component front ring	No
material of the front ring	plastic
color of the front ring	black
General technical data	
protection class IP	IP66, IP67, IP69(IP69K)
degree of protection NEMA rating	1, 2, 3, 3R, 4, 4X, 12, 13
shock resistance	
● **according to IEC 60068-2-27**	sinusoidal half-wave 15 g / 11 ms
vibration resistance	
● **according to IEC 60068-2-6**	10 ... 500 Hz: 5 g
reference code according to IEC 81346-2	P
Substance Prohibitance (Date)	10/01/2014
Net Weight	25 g
Connections/ Terminals	
tightening torque of the screws in the bracket	1 ... 1.2 N·m
Ambient conditions	
ambient temperature	
● during operation	-25 ... +70 °C
● during storage	-40 ... +80 °C
environmental category during operation according to IEC	3M6, 3S2, 3B2, 3C3, 3K6 (with relative air humidity of 10 ... 95%)

Subject to change without notice
© Copyright Siemens

60721	

Installation/ mounting/ dimensions	
height	29.5 mm
width	29.5 mm
shape of the installation opening	round
mounting diameter	22.3 mm
positive tolerance of installation diameter	0.4 mm
mounting height	11.8 mm
installation width	29.5 mm
installation depth	24.4 mm

Approvals Certificates	
Environmental Product Declaration	
● global warming potential [CO2 eq] / during manufacturing	0.625 kg
● global warming potential [CO2 eq] / during operation	0.235 kg
● global warming potential [CO2 eq] / after end of life	-0.267 kg
● global warming potential [CO2 eq] / total	0.593 kg

Environment

Environmental Confirmations

General Product Approval

Maritime application

Maritime application

LRS PRS RINA

other

Confirmation

Further information

Information on the packaging
https://support.industry.siemens.com/cs/ww/en/view/109813875
Information for data generation and storage
https://support.industry.siemens.com/cs/ww/en/view/109995012
Information- and Downloadcenter (Catalogs, Brochures,…)
https://www.siemens.com/ic10
Industry Mall (Online ordering system)
https://mall.industry.siemens.com/mall/en/en/Catalog/product?mlfb=3SU1051-6AA40-0AA0
Cax online generator
https://support.automation.siemens.com/WW/CAXorder/default.aspx?lang=en&mlfb=3SU1051-6AA40-0AA0
Service&Support (Manuals, Certificates, Characteristics, FAQs,...)
https://support.industry.siemens.com/cs/ww/en/ps/3SU1051-6AA40-0AA0
Image database (product images, 2D dimension drawings, 3D models, device circuit diagrams, EPLAN macros, ...)
https://www.automation.siemens.com/bilddb/cax_de.aspx?mlfb=3SU1051-6AA40-0AA0&lang=en

Subject to change without notice
© Copyright Siemens

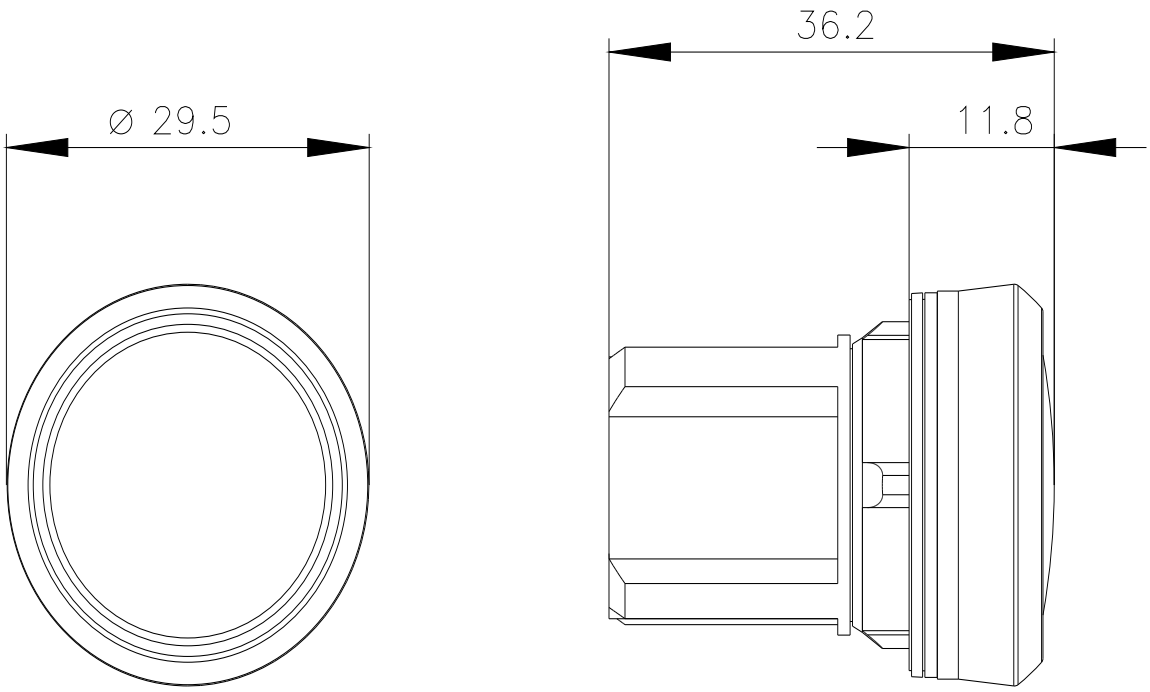

last modified: 4/4/2026

Subject to change without notice
© Copyright Siemens